Code:	BATHTRAP25-CPB

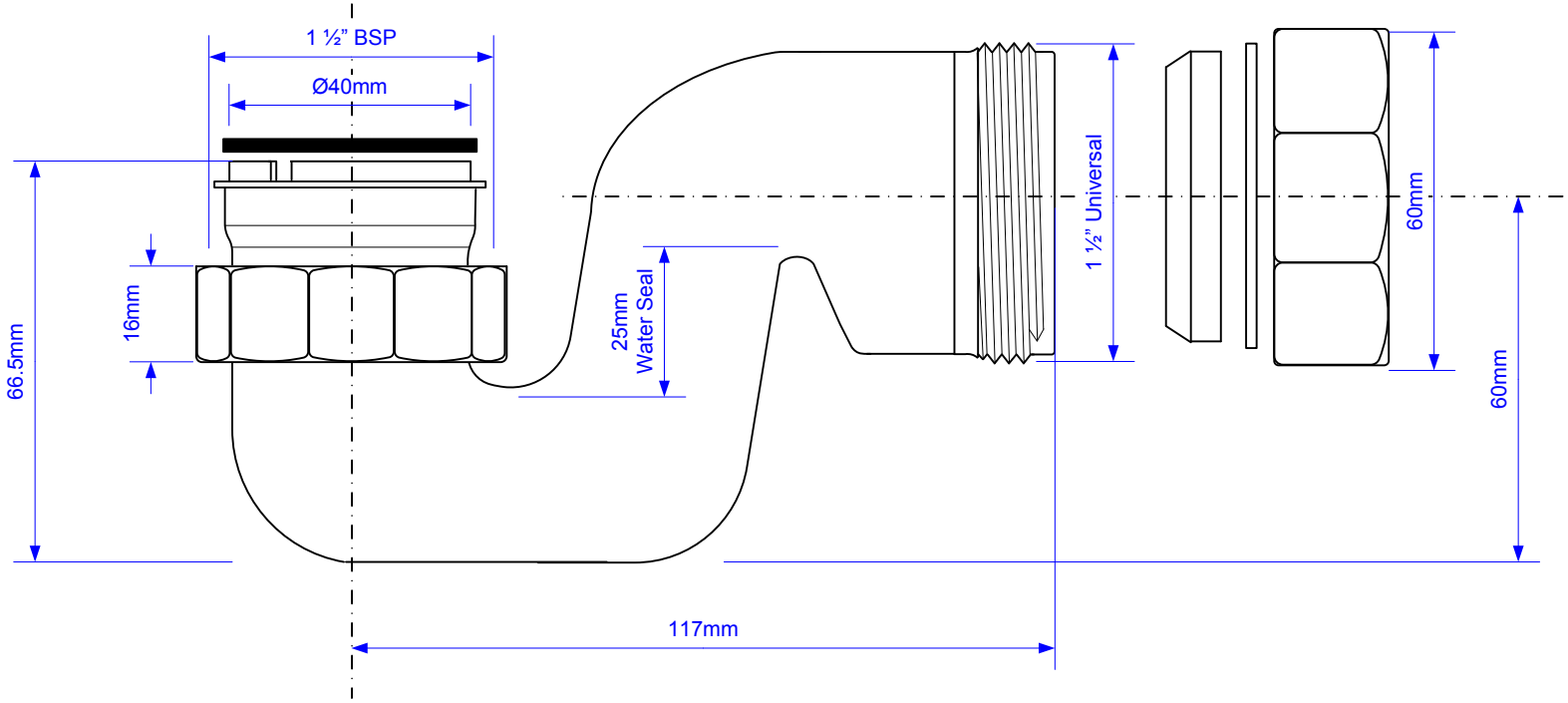

Drawing verified correct as of:	02/06/2015 RM	DRAWN BY RM	REVISED 16/06/2014, 02/06/2015	FILENAME BATHTRAP25-CPB.VSD
			SCALE 1: 1.25	DATE 02/06/2015